Merry Christmas

OFFICIAL NEWSLETTER OF THE

BORDER RADIO CLUB

DEC 2009

FEEDBACK

ALL FOR ME, NOT YOU DEAR

MEMBERS & XYL's BIRTHDAY & ANNIVERSARIES

5th	ZS1ZA	Richard	Keet
6th	ZS2NP	Phil	Sörensen
27th	ZR2WB	Derek	Stewart

9th	ZS2CLI	Richard & Bronwyn	Seddon

IRONY AT IT'S BEST

90 people get the Swine Flu and everybody wants to wear a mask.
A million people have AIDS and no one wants to wear a condom.

A Moment

During a recent password audit, it was found that a blonde was using the following password:
MickeyMinniePlutoHueyLouieDeweyDonaldGoofy
When asked why such a big password, she said that it had to be at least 8 characters long.

POWER OUTAGE

During the months ahead all BRC members and friends are asked to be aware of the Electricity crisis.

We ask you to conserve electricity and fuel. Please cut down on your usage.

Be Innovative and try to think of alternative ways to generate electricity to power your Radios and computers If he can do it so can you.

TRUE STORIES

Number One Idiot

I am a medical student currently doing a rotation in toxicology at the poison control centre..
Today, this woman called in very upset because she caught her little daughter eating ants. I quickly reassured her that the ants are not harmful and there would be no need to bring her daughter into the hospital. She calmed down and at the end of the conversation happened to mention that she gave her daughter some ant poison to eat in order to kill the ants... I told her that she better bring her daughter into the emergency room right away..

Number Two Idiot

Early this year, some Boeing employees on the airfield decided to steal a life raft from one of the 747s. They were successful in getting it out of the plane and home.
Shortly after they took it for a float on the river, they noticed a Westpac Rescue Helicopter coming towards them.
It turned out that the chopper was homing in on the emergency
locator beacon that activated when the raft was inflated.
They are no longer employed at Boeing.

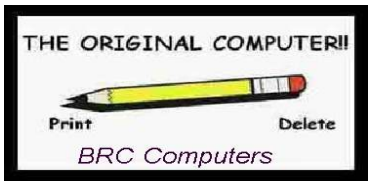

Japanese English

An "Erectric Switch"

(After 4 hrs in on position call an Erectricion)

The first Christmas joke - and it is Scottish

A man in Scotland calls his son in Durban just before Christmas and says,
"I hate to ruin your day but I have to tell you that your mother and I are divorcing; forty five years of misery is enough."
'Dad, what are you talking about ?' the son screams.
"We can't stand the sight of each other any longer" the father says. "We're sick of each other and I'm sick of talking about this, so you call your sister in Joburg and tell her."
Franticly, the son calls his sister, who explodes on the phone. "Like hell they're getting divorced!" she shouts, "I'll take care of this!"
She calls Scotland immediately, and screams at her father "You are NOT getting divorced. Don't do a single thing until I get there. I'm calling my brother back, and we'll both be there tomorrow. Until then, don't do a thing, DO YOU HEAR ME ?" and hangs up.

The old man hangs up his phone and turns to his wife. 'Sorted!

AFRICAN TAXI - WORLD CUP

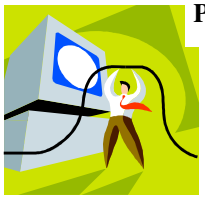

INTRODUCTION TO PACKET - Part 11 - by Larry Kenney, WB9LOZ

COMMANDS USED ON THE PACKET NODE NETWORK - continued from Part 10

ROUTES: The ROUTES command (abbreviated as R) will give you a list of the direct routes to other nodes from the node you're using. The direct routes are the ones where the node can connect directly to the other node. The quality of each route is shown along with the obsolescence count. (See the NODES command in part 10 for an explanation of obsolescence count.) Any route marked with an exclamation point (!) means that the route values have been entered manually by the owner of the node and it usually means that the route is not reliable for regular use.

USERS: The USERS command (abbreviated as U) will show you the callsigns of all the stations now using the node that you're connected to. There are five descriptions used by the node to describe how users are connected:
UPLINK: The station indicated is connected directly to the node.
DOWNLINK: The node has made a connection from the first station to the second station. Example: DOWNLINK (K9AT-15 N6UWK) would mean that the node connected to N6UWK at the request of K9AT.
CIRCUIT: Indicates that the station indicated has connected FROM another node when the node and user callsign are on the left of the <--> and indicates that the station has connected TO another node if node is on the right of the <-->. If you see dashes between the arrows, the circuit is in use. If you see <~~>, the connection is in progress. The alias and call of any other nodes being used are shown prior to the user's callsign.
Examples:
Circuit (SFW:W6PW-1 WA6DDM) <--> AA6ZV would mean that WA6DDM is using this node, that he connected to it from the SFW node and is now connected to AA6ZV. N6PGH <--> Circuit (DIA:WB6SDS-2 N6PGH) would mean that N6PGH connected direct to this node and has connected to the DIA node.
Circuit (SSF2:KA6EYH-2 KK6SD) <~~> (AMCYN:WZ6X-2) Indicates that KK6SD has connected to the node you're using from the SSF2 node and is now attempting to connect to the AMCYN node. CQ: See "CQ command" below.
HOST: The user is connected directly from the node terminal. This is seen when the owner of the node is a user, or the BBS associated with the node is using it to forward messages.
CQ: The CQ command is used both for calling CQ and for replying to the CQ of another station. The command is available only in the latest versions of NET/ROM and The Net. Enter a ? when connected to a node to see if it's available there. The CQ command is used to transmit a short text message from a node, and is also used to enable stations that receive the transmission to connect to the station that originated it. The command is entered as: CQ text message The "text message" can be any information up to 77 characters long including spaces and punctuation, and it's optional.
In response to a CQ command, the node transmits the specified text message in "unproto" mode, using the callsign of the originating user as the source and "CQ" as the destination. As with all node transmissions, the SSID will be translated; that is, the SSID will be 15-N, where N is the SSID of the original callsign. WB9LOZ-0 would become WB9LOZ-15, WB9LOZ-1 would become WB9LOZ-14, etc.
Here is an example of how the node CQ command is used: If station W6XYZ-3 connects to a node and issues the command: "CQ Anybody around tonight?", the node would then transmit: "W6XYZ-12>CQ:Anybody around tonight?"
After making the transmission in response to the CQ command, the node arms a mechanism to permit other stations to reply to the CQ. A station wishing to reply may do so simply by connecting to the originating callsign shown in the CQ transmission (W6XYZ-12 in the example above). Note here that you connect to the station using the translated SSID. A CQ command remains armed to accept replies for 15 minutes, or until the originating user issues another command or disconnects from the node. Any station connected to a node may determine if there are any stations awaiting a reply to a CQ by issuing a USERS command. An armed CQ channel appears in the USERS display as:
(Circuit, Host, or Uplink) <~~> CQ(usercall).
The station may reply to such a pending CQ by issuing a CONNECT to the user callsign specified in the CQ(...) portion of the USERS display--it is not necessary for the station to disconnect from the node and reconnect.
Here's what a typical transmission would look like: (* = entered by user) * cmd: C W6PW-1 cmd: *** Connected to W6PW-1 * USERS {SFW:W6PW-1} NET/ROM 1.3 (669) Uplink(K9AT) Circuit(LAS:K7WS-1 W1XYZ) <~~> CQ(W1XYZ-15) Uplink(WB6QVU) <--> Circuit(SFBBS:W6PW-3 WB6QVU) * CONNECT W1XYZ-15 {SFW:W6PW-1} Connected to W1XYZ * Hello! This is George in San Francisco Hi George! Thanks for answering my CQ. etc.
Users of the CQ command are cautioned to be patient in waiting for a response. Remember, your CQ will remain armed for 15 minutes, and will be visible to any user who issues a USERS command at the node during that time. Wait a few minutes before issuing another CQ to give other stations a chance to reply to your first one! Don't be surprised, however, if you don't receive a response. For some unknown reason, I've found that very few users take advantage of the feature. When you connect to a distant node, the CQ command is a great way to start a QSO with a station in that area, but more users need to be made aware of the CQ feature before it will become very useful.
BBS: The BBS command (which cannot be abbreviated) is available on nodes using the G8BPQ software and having an associated packet bulletin board system. Entering BBS will connect you to the associated BBS.
IDENT: The IDENT command (abbreviated as I) found on NET/ROM nodes will give you the identification of the node you're using. **CONTINUED NEXT PAGE.**

INFO: The INFO command (abbreviated as I) found on The Net nodes will give you information about the node, usually the alias, callsign and location.
INFO: The INFO command (abbreviated as I) found on G8BPQ nodes will give you the identification of the node and a list of the commands available.
MHEARD: The MHEARD command (abbreviated as M) found on The Net and G8BPQ nodes will give you a list of stations heard by the node. If the node has more than one port, you must specify which port you want the listing for by entering a space after the M and then the port number. Examples: M 1 will give you a list for port 1 and M 2 will give you a list for port 2. Use the PORTS (P) command to get a list of the ports and the associated frequencies.

PARMS: The PARMS (Parameters) command (abbreviated as P) found on NET/ROM and The Net nodes is for the owner's use in determining how his station is working. It will give you a list of the node's parameters.
PORTS: The PORTS command (abbreviated as P) found on G8GPQ nodes will list the frequencies of all ports available.
BYE: The BYE command (abbreviated as B) is available on The Net and G8BPQ nodes. It's used for disconnecting from the node. If the node has other software, you must disconnect using the D command in your TNC.
?: Entering a ? will give you a list of the commands available on the node.
Remember, when you are connected to a network of nodes, any commands you send will be directed to the last node you connected to.
TO BE CONTINUED IN THE NEXT ISSUE

NEWS FROM CANADA

From: ZR2LW RICHARD

Greetings

Greetings to all at the BRC.
I received my Radio License and my HAREC certificate for which I thank you.
It would appear that someone paid my club subs for the year and I cannot get anyone to admit to it.
Could you kindly check and let me know so that I can reimburse the kind person.
I had to redo the exam for my Amateur License, as Canada does not have a reciprocal agreement with SA.
The exam here is rather stiff. They go into a lot of detail about FM & SSB transmitters and receivers. Lots of formulae regarding bandwidth, regulations and antenna construction. Very interesting but needed a fair amount of brain tickling to get it all up and running again. I enjoyed the study and feel quite lost now that it is all over. I am impatiently waiting for my license to arrive from Ottawa so that I can get onto the air.
If all goes well, I will be coming to SA for about three weeks, sometime in September 2010. A good HAM friend is quite keen to accompany us to do a hike or two and to see a bit of the country. This lad is pretty clued up and I would like to bring him along if our visit coincides with one of the meetings. Hopefully we will see you folk then.
We have had our first snow of the season but it has thawed after lying on the ground for about three days.
The next expected snow fall is scheduled for this coming weekend. Best wishes to all.
73 Richard.

CHAIRMAN'S CHIRP

Hi fellow BRC members.
As this year draws to a close, I can only thank you all for the fellowship and participation in our meetings, outside events and on-air chats during the past year. This year has passed us by in what seems to have been far less than 12 months and we are ready to enter a new decade already, imagine that.

This is the time of the year when there are more irresponsible drivers on our roads, so if anyone is travelling afar during December and early January, please be safe. We need you back at our first meeting of 2010. Talking about meetings, we have the SARL AGM being held in Port Elizabeth next year from 24 to 26 April, hosted by PEARS. Start thinking about supporting our neighboring Club by attending this meeting. So far we have about 6 Club members travelling down. More about this next year.
All that remains is for me to wish all our members a Joyous and Festive Holiday Season. At this time we need to spare a thought for those less fortunate, as well as families who have lost loved ones during the year.
Anthony - ZS2BQ

D-I-Y MAGNETIC HF LOOP

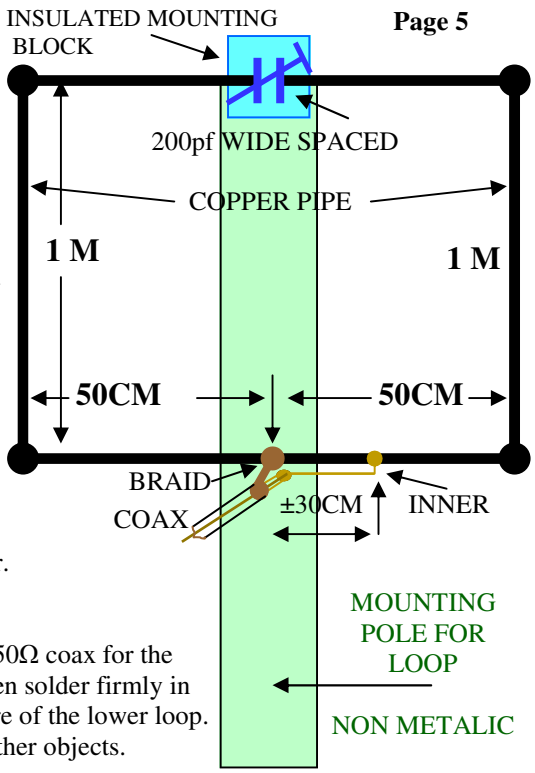

CONSTRUCTION DETAILS

A) The HF loop is made from a continuous piece of copper piping. The bigger the diameter the of the pipe the more broad banded it will be (±12mm)

B) The top of the loop is open circuit and this is where you have to mount a wide spaced 200pf variable tuning capacitor. The capacitor should be protected from the weather and sealed, but allow access for tuning. Connections to the capacitor can be made from Coax braiding. It should be mounted on a piece of insulation material which is screwed/bolted to the loop tube. The loop can be Square or Round.

C) The Magnetic Loop has a high Q and therefore requires adjustment after every change in frequency. A 2:1 SWR should be achievable with no tuner.

D) Beware, the voltage near the Capacitor is high, therefore for safety keep out of reach from wandering fingers /children etc.

E) With the capacitor set at halfway in/out, adjust the inner connection of the 50Ω coax for the lowest SWR at the required operating frequency (Use a crocodile clip). Then solder firmly in that position (without the crocodile clip). Solder the Coax braid to the centre of the lower loop. Try to do the tuning with the Antenna as high as possible, and clear from other objects.

F) The antenna is directional of the ends.

OH TO HAVE BEEN IN ENGLAND JUST AFTER WWII

OLD STUFF

RT 77 GRC9

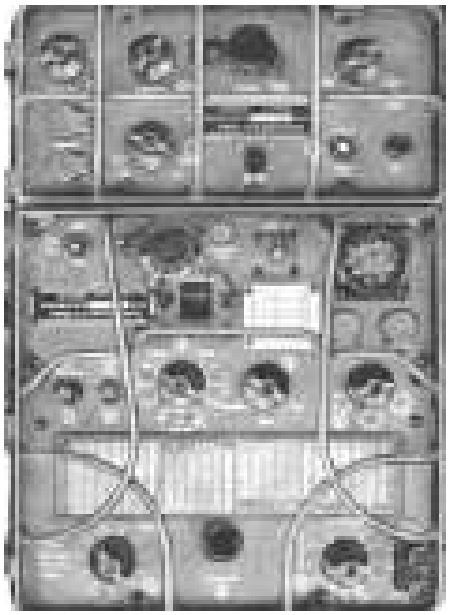

In March 1946, questions were asked in Parliament as to the sale of Government surplus radio equipment to amateurs. Already much use of the surplus apparatus had been purchased in large quantities at ridiculously low prices by dealers who had offered it for sale to show high profits.

Three months later, the Admiralty announced that "electronic scrap" would become available to radio amateurs from Naval depots at a price of fifty shillings a hundredweight. (£2.50) How many complete receivers, transmitters and items of expensive measuring equipment was sold in brand new condition as "electronic scrap", no one can even hazard a guess, but fair minded amateurs regretted that due to abuse, this scheme was abandoned within six months. **Editor:** Those were great times for Ham bargains'. As a young boy I personally climbed up a Hugh pill of TR1144 transmitters not knowing thier real value.

WHAT is DTT? (The BRC keep you up to date)

DTT is digital terrestrial television (or digital terrestrial transmission). It is the broadcasting of television signal in a digital format. At the moment, terrestrial television in South Africa is broadcast in an analogue format. South Africa is advancing now with the planned implementation of a migration from analogue to digital broadcasting.

What is the major difference between analogue TV and digital TV?

Terrestrial television relays a signal across the country by using a transmitter network. Each tower has a specific area of transmission coverage, and in turn, through this network the television signal is provided across the country. The broadcast signal is sent via the various towers and if you fall within a tower coverage area, you will be able to receive the broadcast signal via your terrestrial aerial – either outdoor on your roof or indoor above your television set. In analogue, the signal transmission is in the form of electromagnetic waves and it is not the most efficient way of transmitting TV signals. In a digital format, the signal is encoded and compressed which allows for more channels to be broadcast. There is a minimum of eight new video channels that can be provided in the same frequency as one analogue channel. Satellite television signal uses satellites in the sky to relay the signal to earth via a satellite dish.

What is the reason for migrating from analogue to digital?

The main reason for the migration to digital is to release valuable spectrum which can be used for other services. Spectrum is scarce and therefore more efficient use of the spectrum is required so more terrestrial telecommunications and broadcasting services can be made available. Currently, analogue broadcasting is not subject to interference, but this will no longer be the case in 2015 and therefore the transition from analogue to digital has to be completed 2015.

Has this migration been implemented anywhere else in the world?

Yes. Examples of countries that are advanced in their migration process include the United Kingdom, New Zealand, Sweden, the United States, France and Mauritius. Soon it will be in South Africa.

Will I require a satellite dish to receive DTT?

A satellite dish will not be required to receive the DTT signal

Will I need a require a new aerial to receive DTT?

Some viewers may require new or upgrades to existing aerials.
Aerial adjustments may also be required.

Will I require any other additional equipment to receive DTT?

Yes, You will need to have a **DTT Set-Top Box**. This Set-Top Box is different to the Multichoice satellite box or the current MNet decoder

What is a Set-Top Box (STB)?

A Set-Top Box is a receiver that will decode the digital signal to enable the channels to be displayed on your analogue
television set and will plug directly into your television set

Do I have to have a Set-Top Box?

Yes. You need this device that decodes the digital signal received via a standard aerial antenna and supplies the TV set with a video signal. Without a Set-Top Box you will be unable to view the digital television services on your television set.

What is the approximate cost of a Set-Top Box?
It has been estimated that the retail cost of the free-to-air Set-Top Box will be in the region of approximately R400 - R700. This will be a once-off cost for purchasing the STB.

Do I require a Set-Top Box to receive the DTT services if I have DSTV?

Yes. Although your television signal via your DSTV will not be affected in any way by the DTT migration, if you would like to receive the DTT services and free-to-air channels you will require a STB. This is optional and entirely up to you.

HENRY ZS2AHL,
Overhauls his antennas. Pat supervisors to ensure that it is done correctly !.
Marcel ZS2BS came out from Germany and used Henrys QTH as a free B&B. Therefore Henry had no option but to get his aerials working and in top order. Marcel is a keen DX'er and he new that Marcel would be burning the midnight oil working the contests during his stay. Marcel did work one of the contests among his busy schedule. He visited and took part in the JOTA weekend and paid many visits to his old friends around the city.
Next month there will be a feature article about Marcel's DX activities

The Importance of Microwaves to Amateur Radio

… by Mike Dixon, G3PFR, RSGB Microwave Manager

There is no doubt in my mind that this is the only area of the spectrum where the amateur movement can be seen to be making any technical advances Background:
Several factors have discouraged the use of the VHF/UHF bands by "Novice" licensees in the UK (now re-defined as Foundation and Intermediate Licences).
The first is the ready accessibility of most, or all, of the HF bands under the new UK Foundation and Intermediate Licences, together with the ready availability of commercial multiband/ multimode transceivers.
The second is the relatively high cost of installing steerable VHF/UHF beams, at least in urban areas (where there can be serious domestic, neighbour objections, or planning permission problems), compared to the "invisible half-sized G5RV or W3DZZ" approach possible at HF in even small gardens.
Foundation licences allow 10W access to all the bands up to 440MHz with the exception of the 10m band, and with the use of transmitting equipment which either conforms to EC standards or is available as approved commercially available kits, although receivers and antennas may be selfbuilt.
The Intermediate licence allows full access to all the bands up to 440MHz at the 50W level.
The Full Licence (which incorporates the old "Class A" and "Class B" licences) allows access to all bands, including microwaves, at the 400W level.
The current UK "Novice" licence framework will not allow the use of the bands above 440MHz,
Further factors that discourage Novice experimentation at UHF and into microwaves are:
• The high cost of commercial equipment (if available) and kits (and the skills to build them)
• The education/experience/learning level of the Foundation and Intermediate licences is often insufficient (with the exception of a minority of experienced or professionally qualified persons) to support the technology and skills necessary for operation in the Amateur/ Amateur Satellite Secondary Shared bands.
There is a relative lack of support for amateur UHF/microwave operation by both the national societies and the regulatory authorities, both of whom seem to view these activities as very much a "minority" activity.
The art of home construction is largely dead, for the same reasons as above.
I recently questioned some 20 - odd "novice" members of my local radio club and found that most of them, if operating on the VHF/UHF bands, used only FM and repeaters, with vertically polarised no-gain, or low-gain, antennas! Almost without exception, they preferred to use 80m or 40m SSB to get better coverage than was possible at VHF or UHF. "Proper" VHF/UHF operation seemed to be regarded as something of a "black art". None of them had undertaken, or appeared interested in, any serious home construction!
I believe that only "education" at local club and individual level ("Elmers") can correct this situation, and it is a process that will take a long time to achieve.
(Editor: The above seems to be the same in this country (RSA). We need to get the young guys motivated and educated to what all our hobby has to offer.)

~ SUPER HAM ~

George Ulm, W9EVT was born in the Free City of Danzig in 1930. In the mid-1930s he moved to Chicago with his family. After W.W.II, he produced some of the first convention exhibits for the Radio Parts Show in the Windy City. His business later expanded to world's fairs and conventions such as the CES in Las Vegas and Chicago. George is a Korean Conflict veteran, taught electronics in the Navy Air Corps, developed and put on air the first two meter amateur repeaters in the late 1950s.

George has lived in Mexico, Europe, Africa and Australia with ham calls associated with each part of the world. In the early 1960s he purchased an apple and cherry farm on Washington Island, WI. At retirement he decided to raise antennas on the property instead of fruit. He lives there year round with his wife, Susan, his dogs, Ivan and Bosun and a very talkative African Gray Parrot, B.B.

Web Page http://www.greengate-wibb.com/HamRadio.html

SHACK OF THE YEAR
NOW THIS IS WHAT I CALL A REAL COLLECTION

THIS IS ONLY PART OF HIS COLLECTION, AND THEY ARE ALL LAYED OUT NEATLY LIKE THESE

Wireless telegraphy is electronic signaling through the ground, bodies of water, or the air, which does not require the direct metallic connection, from transmitter to receiver, that was needed by the original electric telegraphs. The term covers a number of related technologies developed beginning in the mid-1800s, including earth conduction, electrostatic induction, electromagnetic induction, and, most importantly, electromagnetic radiation (radio). In most implementations,

Morse code was used for communication. Radio proved to be by far the most efficient of these methods, so, beginning around 1900, most references to "wireless" actually mean radio transmissions, and for those purposes "wireless telegraph" was eventually supplanted by the more precise term "radiotelegraph". The term "radioteletype" emerged to describe non-Morse text transmission. Multiple technologies fall under the term "wireless telegraphy", which sometimes creates confusion, as it is not always clearly stated exactly which form of "wireless" technology is being employed. For each of these technologies, signals are created by electrical currents, which, depending on the frequencies employed, produce different forms of radiation. However, often more than one type of radiation is being produced, which can make it difficult to determine which one is responsible for an observed effect. Among early experimenters, there was often significant uncertainty about exactly how they were producing their results.

The earliest experiments with wireless telegraph transmissions date back to the beginnings of the electric telegraph. The original electric telegraphs employed both sending and return wires, in order to provide a complete electrical circuit for the message transmission. However, in 1837, Carl August von Steinheil of Munich, Germany found that, by connecting the terminal end of the sending wire to metal plates buried in the ground, the return wire could be eliminated, and only a single wire was needed for telegraphing. At the time, a common belief was that, with the single wire configuration, the return current was now traveling through the ground back to the sending point in order to complete the electrical circuit. This turned out to be incorrect, as the transmitted current was actually being absorbed into the earth at the receiving point, but it did lead to speculation that it might be possible to someday also eliminate the sending wire, and telegraph through the ground without using any wires at all.

Other attempts were made to send telegraphic signals through bodies of water, for example, in order to span river crossings. Prominent experimenters along these lines included Samuel F. B. Morse in the United States and James Bowman Lindsay in Great Britain — in 1854 Lindsay demonstrated transmission across the Firth of Tay from Dundee to Woodhaven (now part of Newport-on-Tay), a distance of nearly 2 miles [3 kilometers]. However, because of the very high resistance to electrical currents, earth conductivity transmissions were found to be limited to only a few meters, and even the somewhat greater distances possible through water had little practical use. Both electrostatic and electromagnetic induction were used to develop wireless telegraph systems that saw limited commercial application.

In the United States, Thomas Edison, in the mid-1880s, patented an electrostatic induction system he called "grasshopper telegraphy", which allowed telegraphic signals to jump the short distance between a running train and telegraph wires running parallel to the tracks. This system was successful technically but not economically, as there turned out to be little interest by train travelers in an on-board telegraph service.

The most successful creator of an electromagnetic induction system was William Preece in Great Britain, who began tests in 1882. By 1892 he was able to telegraph about 5 kilometers across the Bristol Channel. However, his induction system required extensive lengths of wire, many kilometers long, at both the sending and receiving ends, which made it impractical for use on ships or small islands, and the relatively short distances spanned meant it had few advantages over underwater cables.

Continued on next page

Wireless Telegraphy continued

During the 1880s, German Heinrich Hertz demonstrated the production and reception of electromagnetic radiation (radio waves) in a series of groundbreaking experiments.

This led to numerous experimenters working at using radio signals for wireless communication, initially with limited success. However, by 1897, Guglielmo Marconi had made a series of demonstrations in Great Britain which showed the practicality of using radio for signaling for far greater distances than had been achieved by any other means, which helped expand research worldwide. By the 1920s, there was a worldwide network of commercial and government radiotelegraphic stations, plus extensive use of radiotelegraphy aboard ships for navigational and commercial communication plus passenger messages. One sophisticated implementation of wireless telegraphy was telex using radio signals, developed in the 1940s, which was for many years provided the only reliable form of communication between many distant countries. The most advanced standard, CCITT R.44, automated both the routing and encoding of messages, which were transmitted using short wave radio. While radiotelegraphy had long been part of maritime safety, the requirement to monitor a Morse distress channel eventually was made obsolete in the Global Maritime Distress and Safety System. Radiotelegraphy still has limited use in some military and covert communications, and in amateur radio.

ELECTRICITY IS EXPENSIVE ?

LOW-COST SOLAR CHARGER

THE POSSIBILITY THAT WE may yet see cheap solar power stemming from work at the Swiss Federal Institute of Technology was noted in the Jan 1992 *TT* p39. But currently, solar arrays are still relatively high-cost items, even if required only to provide a few watts for keeping a small nicad of lead-acid battery, used intermittently, up to scratch.

Electronics Australia (Feb 1992, pp 72-75) however, publishes a constructional project for a solar charger suitable for use with batteries of up to 12V and claimed as "probably the cheapest solar charger project ever published". This is based on amorphous-type solar panels rated at 6V, 1W output (more in brightest sunshine) costing $A14.00 (roughly £6), or using enough photovoltaic solar cell 'offcuts' to make a 6V, 1.5W panel at about half the price. A DC-DC converter (**Fig 6**) is then used to push the charging voltage up to that required for batteries of between about 7.5 to 14V, making it possible to construct the charger for about £8. A complete kit, including PCB, is marketed in Australia for this project by Oatley Electronics but the components are probably available in the UK.

The charge to a 12V battery varies between 400mW and 1W, representing a charge current ranging from 30mA to over 80mA depending on sunlight conditions. This is sufficient to maintain the charge of a vehicle battery etc, if this is to be left unattended for long periods and then used only intermittently. The unit can also be used to charge nicad cells. Six cells should charge at between 50 to 100mA, sufficient to fully charge a set of AA cells in some 12-14 hours: see **Fig 7**.

The DC-DC converter is based around a 400Hz oscillator (IC1a) which after amplification switches the complimentary germanium output transistors (AD161, AD162) with two 'charge pump' voltage doublers which together give an output of up to four times the input voltage. Batteries of less than 12V are best connected between B+ and B- while 12V lead-acid batteries between B+ and earth.

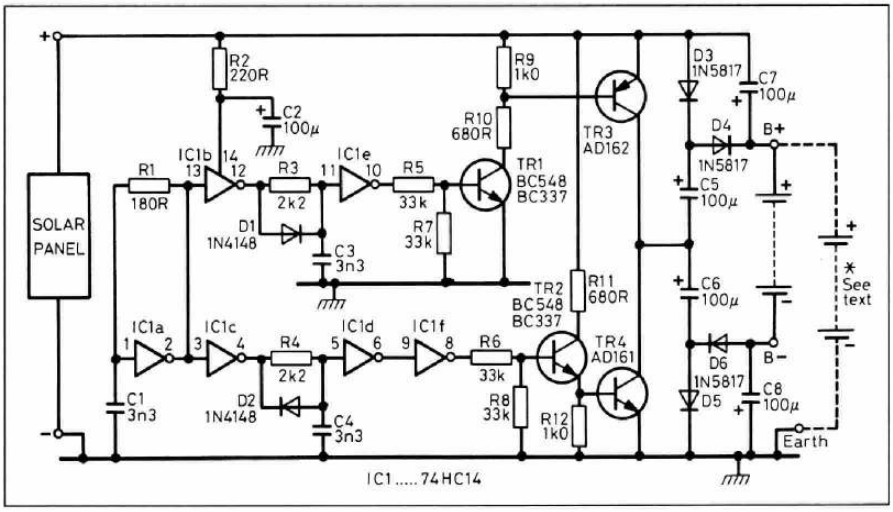

Fig 6: The *Electronics Australia* low cost solar battery charger with 400Hz DC-DC converter. A 12V battery is best connected as shown by dotted connection.

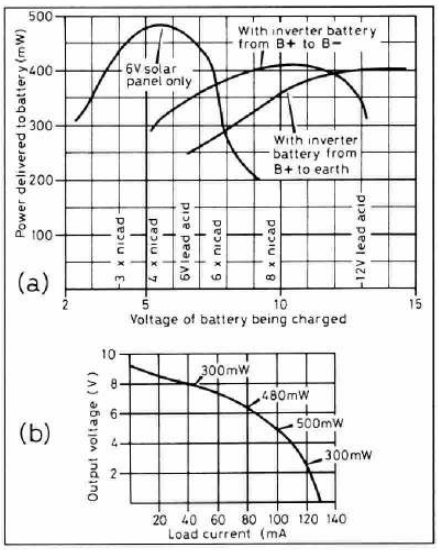

Fig 7: (a) Power transferred by the solar charger with a solar panel rated at 6V 1W measured in Australian winter conditions. Power transfers of over 1W expected under Australian summer conditions. (b) Power transfer directly from a 6V 1W solar array under different load conditions. Optimum power transfer with load currents of about 100mA. Possibly twice the power under Australian summer conditions.

MEASURING INSTREMENTS - MULTIMETERS

The multimeters are the most frequently used instrument for servicing hi-fi equipment. As its name implies, the multimetes have a diverse range of functions. It is also very easy to use. Electrical servicing normally begins with a voltage and conduction check using a multimeter, and a skilled service technician can usually complete the task with only a multimeter and a soldering iron.

The following are the functions, types and applications of multimeters in common everyday service use.

1. Multimeter Function

The multimeter is designed to carry out the basic essential functions for servicing such equipment as radio receivers, TV sets and stereo systems. These functions include:

1) DC voltage measurement
2) AC voltage measurement
3) DC current measurement
4) Resistance measurement (conduction check)

Some multimeters also have additional scales for measuring inductance (coil) and capacitance (condenser). However, these measurements are rarely required in routine servicing.

2. Multimeter Classifications

In broad terms, multimeters fall into the following three categories:

1) Conventional type
2) Electronic type
3) Digital type

The ordinary type is a combination of a meter indicator, resistors and diodes which are selectively switched to perform specific functions, such as the measurement of voltage, current, resistance and range. More recent types are improved in their accuracy and sensitivity and are sufficient for practical use. In fact, the conventional type multimeter is the most popular type due to its simple handling. Compared with other types, the conventional type has a lower internal resistance. Therefore, it is recommendable to use other types or the mV meter to accurately measure high impedance circuits and high resistance values.

An electronic multimeter functions basically the same way as the ordinary type, the only difference being that it has an internal amplifier, which is normally an FET (field-effect transistor). The FET provides a very high input impedance, which is capable of measuring minute voltage or very high resistance. This makes it a highly reliable type of multimeter for the measurement of high resistance or high impedance circuits.

The only disadvantage of the electronic multimeter is that zero-adjustment of the meter indicator is necessary prior to taking each measurement. Some manufacturers offer adaptors which enable electronic multimeters to check the current gain of transistors.

1) Conventional type

2) Electronic type

The digital multimeter differs from both previous types in that it operates in the digital mode. It is composed of a range selector circuit, operation circuit and a display circuit. The measured value is directly indicated by a numeric tube or LED (Light Emitting Diode) display. However, some technicians still prefer analog indication; it's purely a matter of taste.

Personal tastes apart, digital multimeters provide a very high degree of accuracy, sensitivity and input impedance. Some types even have automatic range switching. Cost-wise, these are very expensive, up to ten times the price of an ordinary multimeter. Nevertheless, they are extremely versatile.

3. Measurement Precautions

Although multimeters are designed to take practically every kind of routine measurement, covering voltage, DC current and resistance, certain precautions are necessary to assure accurate usage. In this issue, we will discuss the precautions as they apply to the ordinary type multimeter since it is the one that is used the most.

The composition of an ordinary multimeter and the basic circuits for measuring voltage, current and resistance are illustrated in Figs. 1 and 2. (In an electronic multimeter, a DC amplifier is included to ensure high input impedance and sensitivity.)

1) DC Voltage Measurement

On selection of a DC volt range, a fixed resistor (multiplier) is connected in series to the meter indicator. The measurement range (voltage range) is switched by changing the series resistance value. Since the internal resistance of the meter indicator is much lower than that of the multiplier, the input impedance of the multimeter is determined by the multiplier used. Which means that a higher voltage range produces a higher input resistance. For voltage measurement, test prongs are connected in parallel to the circuit

which is going to be measured, making sure that the correct polarity is observed. A certain degree of error is inevitable, depending on the internal resistance of the circuit under test. Assuming that the multimeter has an internal resistance of 5kΩ/V, the resistance will be 1.5MΩ at the 300V DC range. A circuit equivalent to this, with multimeter connected, is shown in Fig. 3.

In this case, the voltage indicated by the multimeter will be calculated as follows:

$$E' = 300 \times \frac{\frac{200 \times 500}{200 + 1500}}{\frac{200 \times 1500}{200 + 1500}} + 100 = 191.5\ (V)$$

The true voltage, without the multimeter connected, is 200V

$$\left(E = 300 \times \frac{200}{200 + 100} = 200\right),$$ thus,

the voltage indicated by the multiplier (191.5V) shows an error of

$$4.25\%\ \left(\frac{200 - 191.5}{200} \times 100 = \frac{8.5}{200} \times 100\right).$$

When measuring the voltage in a vacuum tube or other high resistance circuit, the load effect of the multimeter impedance must be considered. Preferably, a multimeter having an internal resistance per volt higher than 20kΩ should be used.

2) DC Current Measurement

For this type of measurement, the multimeter must be connected in series to the test circuit, observing the correct polarity between the test prongs and the circuit (current source). The internal resistance of the multimeter will show a certain deviation from the measured value. The true current value and meter reading are shown in Fig. 4.

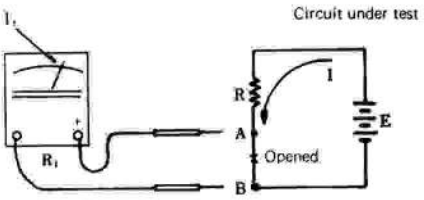

I: Current before the circuit is opened (true current)
I': Current readout
R_1: Multimeter resistance
D: Error (%)

$$I = \frac{R + R_1}{R} \cdot I_t \qquad D = \frac{R}{R_t + R} \times 100\ (\%)$$

Fig. 4 DC current measurement

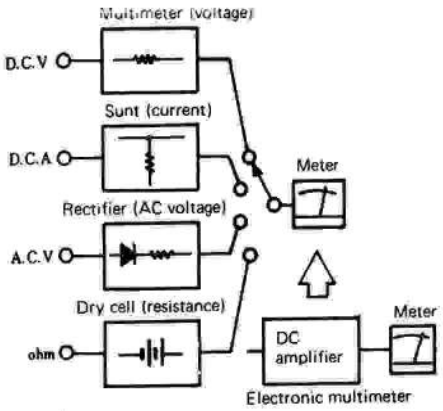

Fig. 1

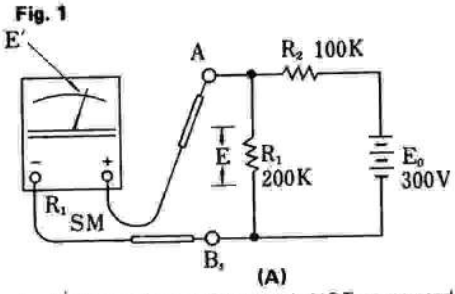

(A)

E: Voltage when multimeter is NOT connected (True voltage)
E': Voltage indicated by multimeter
R_1: Internal resistance of multimeter

Fig. 3

3) AC Voltage Measurement

Meter polarity does not apply to AC voltage measurements, and the load effect of the multimeter impedance equals that of the DC measurement. Ordinarily, the input resistance of the multimeter during AC measurement is lower than that for DC voltage measurement. Therefore, a higher voltage range will result in greater accuracy. However, if the voltage readout is too low, at the far left to the scale, readout accuracy will be lost. So for greater accuracy, it is better to select an AC volt range that will produce the largest pointer swing.

As the multimeter is graduated (AC scale) to indicate effective sine wave values (average value, rms), considerable error will result if it is used to measure pulse or other distorted waveforms besides sine waves.

Normally, in vacuum tube or transistor circuits, the AC signal voltage is superimposed with certain DC voltage components such as bias, anode, collector voltage, etc. The DC component effect can be cut by connecting a capacitor in series to the test prong. But before doing so, be sure to check the impedance of the circuit under test and the signal frequency so that the correct capacitance can be determined.

Also, select the lowest capacitance possible, since an unnecessarily large capacitance will induce noise or hum in the test circuit.

The AC volt circuit has certain limitations in its frequency characteristics. Normally, an acceptable level of accuracy is assured for a frequency range of 50Hz to 30kHz for the popular type, or 30Hz to 100kHz in the case of a specific type. Accurate measurements beyond these frequencies are out of the range of a multimeter. In which case, a professional AC mV meter or CRT oscilloscope is required.

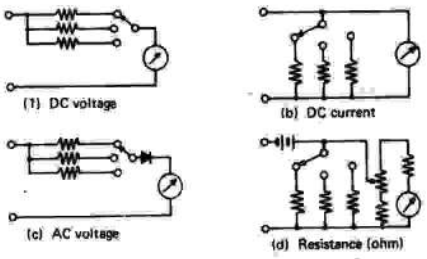

Fig. 2

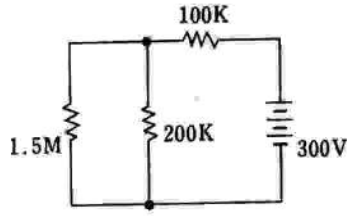

(B)
Circuit with multimeter connected

4) Miscellaneous

In addition to the previously described measuring functions, the multimeter can also be used to check resistance values (ohm range). No particular precautions are necessary in this case, however, an ohm range that gives the most adequate readout is desirable. On an average, component testing using the ohm range for checking such things as capacitor insulation and diode conduction, is conducted more frequently than pure resistance measuring.

Details on how the ohm range can be used to test component quality will be given in the next issue.

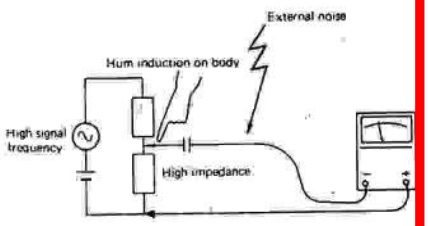

Fig. 5 When circuit impedance is too high,

BRC XMAS PARTY

THE MAIN PRIZE IS DRAWN (A TELCOM ANTIQUE TELEPHONE)
AND THE WINNER IS - NEIL ZS2AI


BRC XMAS PARTY

BRC COMMITTEE

CHAIRMAN
Anthony Forteath - ZS2BQ
H - 043 7411686
W - 043 7032032
C - 083 7758880
anthony.forteath@eskom.co.za

VICE-CHAIRMAN
Ivan Newman - ZS2ILN
H - 043 7269013
W - 7021151
C - 082 8258512
newmanil@telkom.co.za

TREASURER
Phil Sorensen - ZS2NP
H - 043 7261689
W - N/A
C - 072 7244923
philzs2np@absamail.co.za

SECRETARY
Clarence Coetzer -ZS2CDC
H - 043 7264603
C - 082 3769896
rotormotor@mazdarotary.co.za

HON. LIFE MEMBERS
ZS2BV Trevor Foxcroft

ZS2KW Ken Wood

EDITOR
ZS2ABF Peter Tottle
Send magazine contributions to:- feedbacknews@zs2brc.co.za
Phone: 043 7452716
Cell: 0835458568

The Border Radio Club holds monthly General Meetings every third Tuesday of the month at The Gatehouse, Eskom's Sunilaws Office Park, Quenera Drive, Beacon Bay 19:30 for 19:45.
Anyone and everyone is welcome to attend. The Club can be contacted via e-mail at:
info@zs2brc.co.za or news@zs2brc.co.za or feedbacknews@zs2brc.co.za
Visit our Border Radio Club Website at address, http://www.zs2brc.co.za/ (do not use a search engine)

Listen to our Sunday bulletin at 07:45 on 145. 650 Mhz. FM Local, and relays on 145. 675 Mhz. FM, 3.575 Mhz. FM, 7. 074 MHz LSB, and 3.615 MHz LSB.